Kawasaki
Robotics

K – Positioner

PST125-L2

POSITIONER WITH RATED CAPACITY OF 125 KG

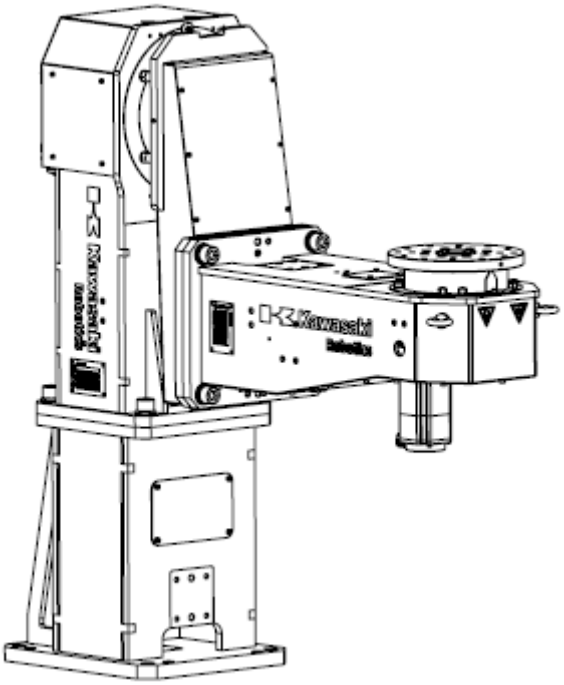

Contents:

1. Introduction 2
2. Technical parameters 3
3. External dimensions 4
4. Markings on the machine 5
5. Load charts 6
5.1. Maximum rated load distances 6
5.2. Chart of the load relative from the distance from the plate axis 6
5.3. Chart of the load relative from the distance from the plate 7
6. Basic units of the positioner 8
6.1. Mechanical system 8
6.2. Electrical system 8
7. Assembly and start-up 9
7.1. Assembly 9
7.2. Getting ready for operation 11
7.3. Emergency Stop connection 11
7.3.1. Cubic-S Option 11
7.4. Start-up 12
7.5. Working and safe use conditions 13
7.6. Maintenance of the positioner 14
7.7. Maitenance schedule 14
7.8. Complement to the copper paste in the ground transfer system 15
7.9. Adjustment of the clamping force of the ground transferring system 15
8. Lay of user cables inside the structure 16
9. Storage and transport conditions 17
9.1. Storage 17
9.2. Transport 17
10. Safety information and residual risk 18
10.1. Danger due to mechanical construction: 18
10.1.1. Crushing and cut-offs 18
10.2. Dangers due to the electrical system 18
11. Warranty conditions 18
12. Notes 19
13. Manufacturer's data 22

Appendix 1 - Spare parts list

Copyright © 2018 Kawasaki Robotics GmbH All rights reserved by Astor

1. Introduction

Two-axis (rotary-tilting) PST125-L2 positioner is an electrically driven positioner. It is equipped with rotary axes controlled in a continuous manner. It is designed to work in a robotic welding station and is used to rotate and tilt the welded parts. **It is controlled from the KAWASAKI robot controller as additional axes.** Read and understand this manual thoroughly, and take appropriate safety measures in using this product.

I. These instructions do not constitute a guarantee of the system in which the positioner is installed. Accordingly, the Astor company is not liable for any accidents, damages and/or problems related to industrial property rights arising as a result of using the system.
II. It is recommended that all personnel assigned to operating, teaching, servicing or maintaining the positioner attend the necessary courses when installing the system before commencing the performance of their duties.
III. The Astor company reserves the right to alter, correct or update this manual without prior notice.
IV. Keep the following instructions with care and in a place where they can always be available for use. If the positioner is re-installed or relocated, please attach these complete and unaltered instructions. In case the instructions are lost or damaged, please contact the Astor company.

Copyright © 2018 Kawasaki Robotics GmbH All rights reserved by Astor

2. Technical parameters

Parameter	PST125-L2
Max. Payload	125 kg
Nominal Torque JT1	490 Nm
Max. Torque JT1	1200 Nm
Nominal Torque JT2	265 Nm
Max. Torque JT2	660 Nm
Turning Range JT1	+/-180°
Turning Range JT2	+/-360°
Max. Rotating Speed JT1	150°/s
Max. Rotating Speed JT2	180°/s
Repeatability	±0.05 mm*
Max. Offset COG from Rotating Axis JT2	140 mm
Max. Offset COG from Flange Surface	370 mm
Max. Mass moment of inertia JT1	180 kgm²
Max. Mass moment of inertia JT2	80 kgm²
Mass	330 kg
Default Height of Rotating Axis JT1	804 mm
Installation Position	Floor
Nominal weld current – 100% duty cycle	500 A
Environment cond.	0-40°C
Emitted acoustic pressure (adjusted by A)	< 70 dB
Emitted acoustic pressure (adjusted by C)	< 63 Pa

*R=340 mm from rotating axis

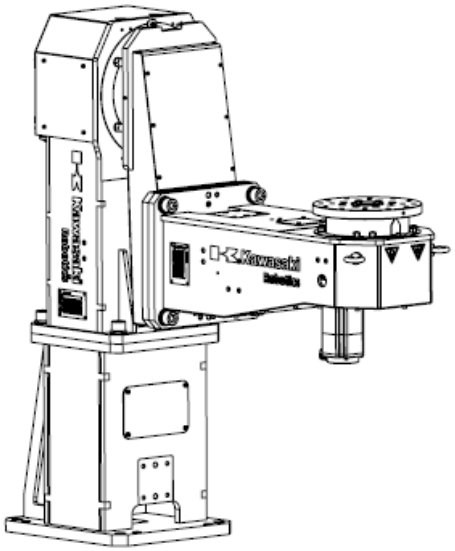

Copyright © 2018 Kawasaki Robotics GmbH All rights reserved by Astor

3. External dimensions

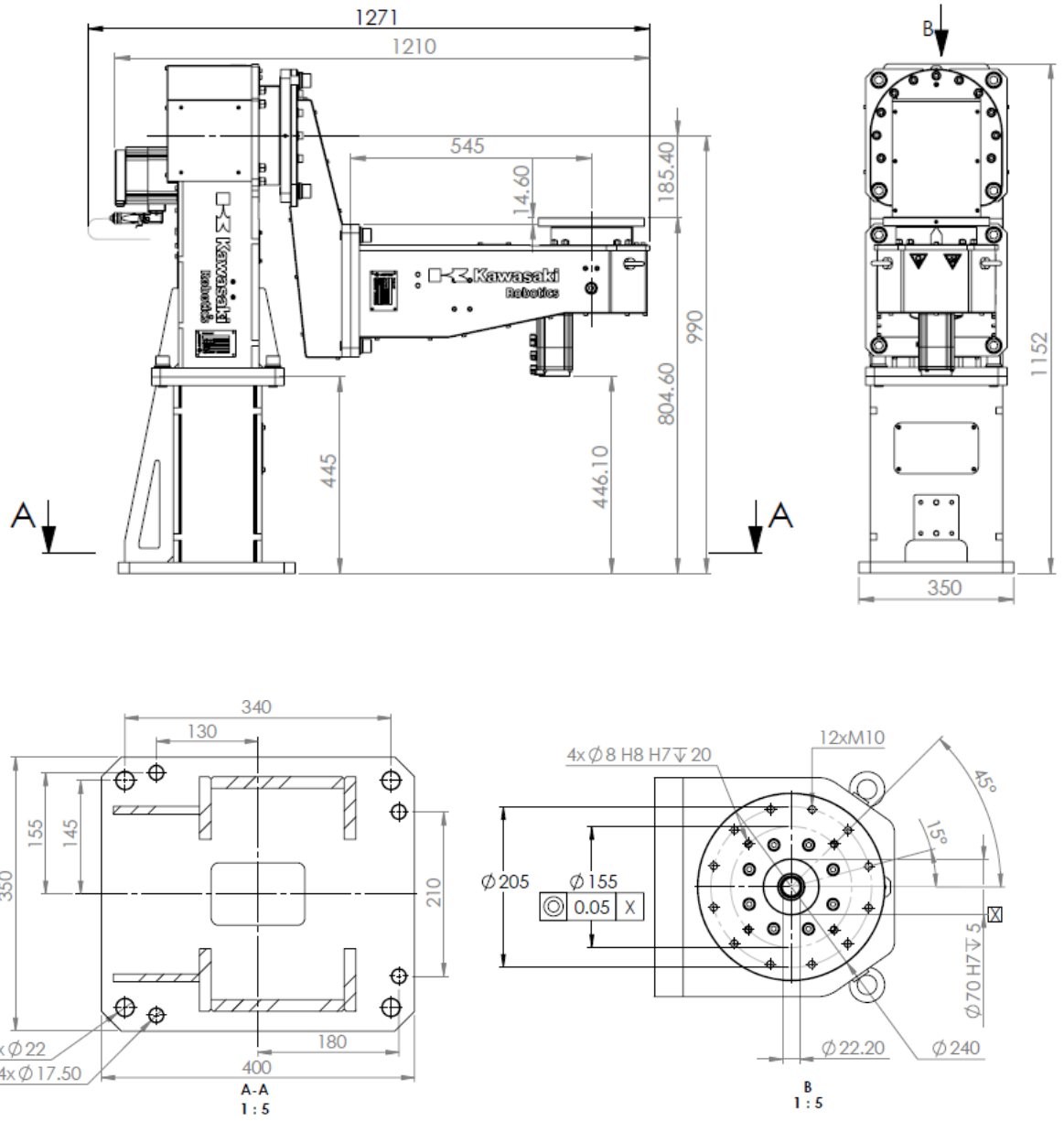

Fig. 1 Basic dimensions of the positioner with spacing of fixing holes on the base and the plate

Copyright © 2018 Kawasaki Robotics GmbH All rights reserved by Astor

4. Markings on the machine

High voltage warning label

Rotating machine parts warning label

Compression/crushing warning label

Hot surface warning label

Information label

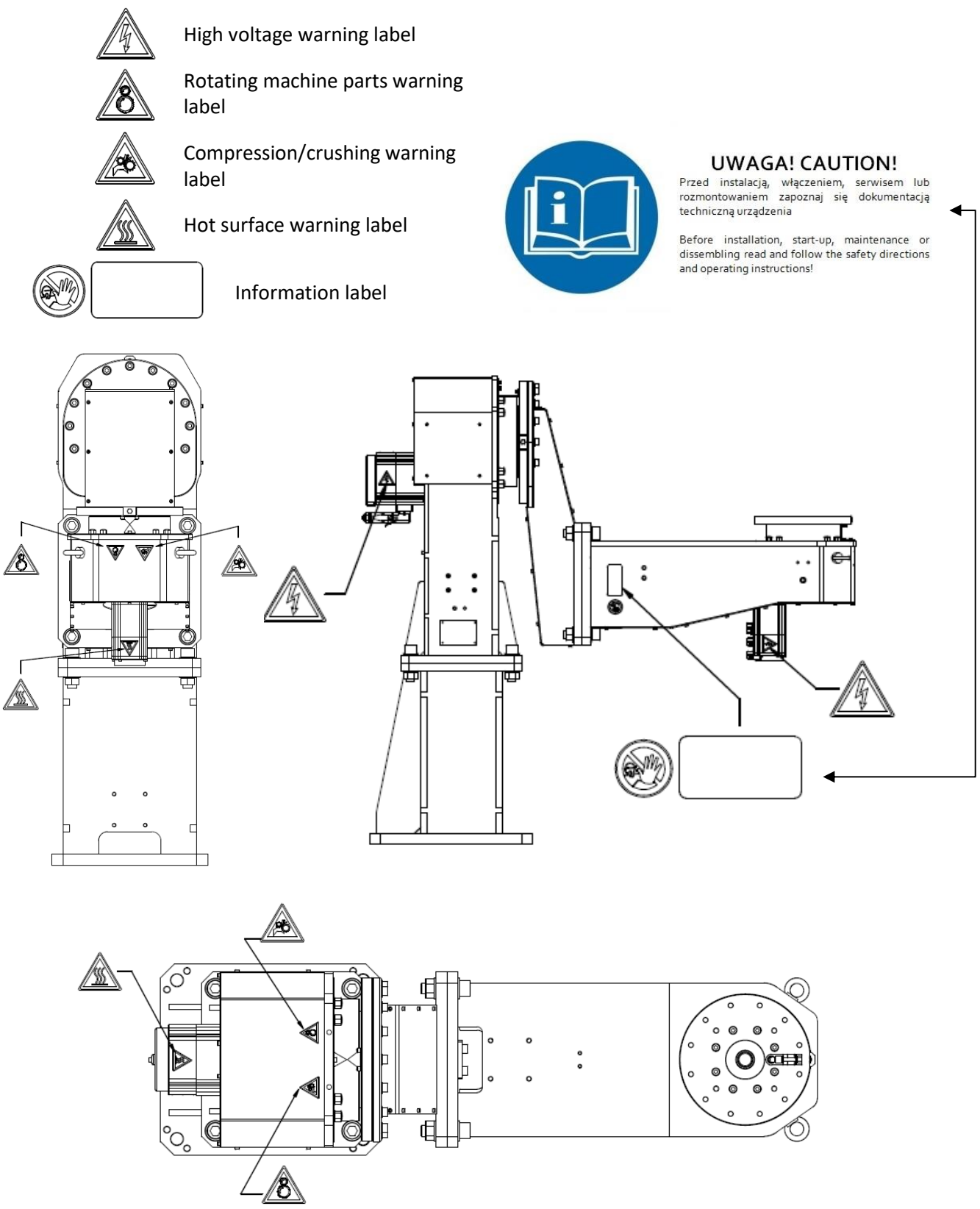

Fig. 2 Warning signs located on the positioner

Copyright © 2018 Kawasaki Robotics GmbH All rights reserved by Astor

5. Load charts

5.1. Maximum rated load distances

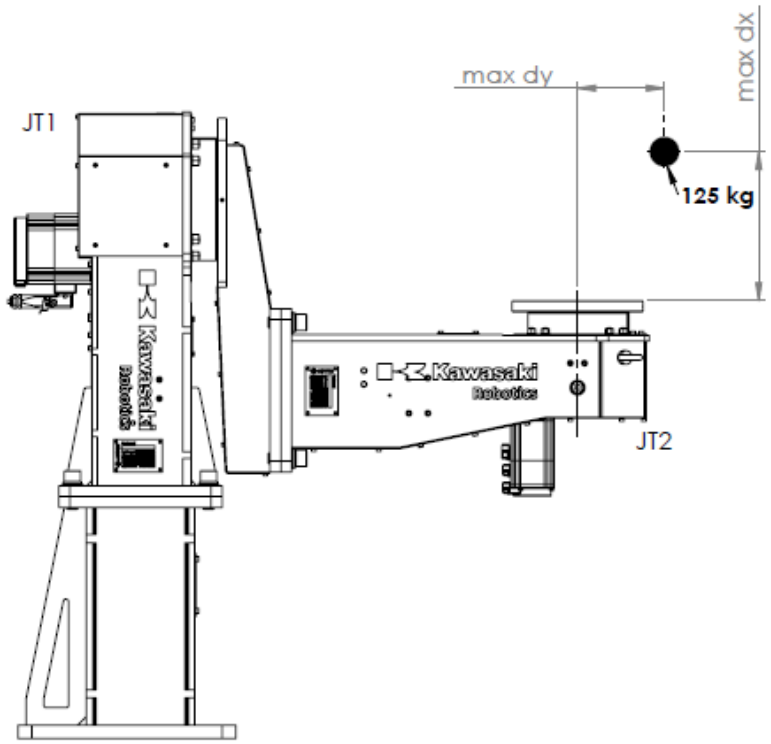

Fig. 3 Nominal rated load position

5.2. Chart of the load relative from the distance from the plate axis

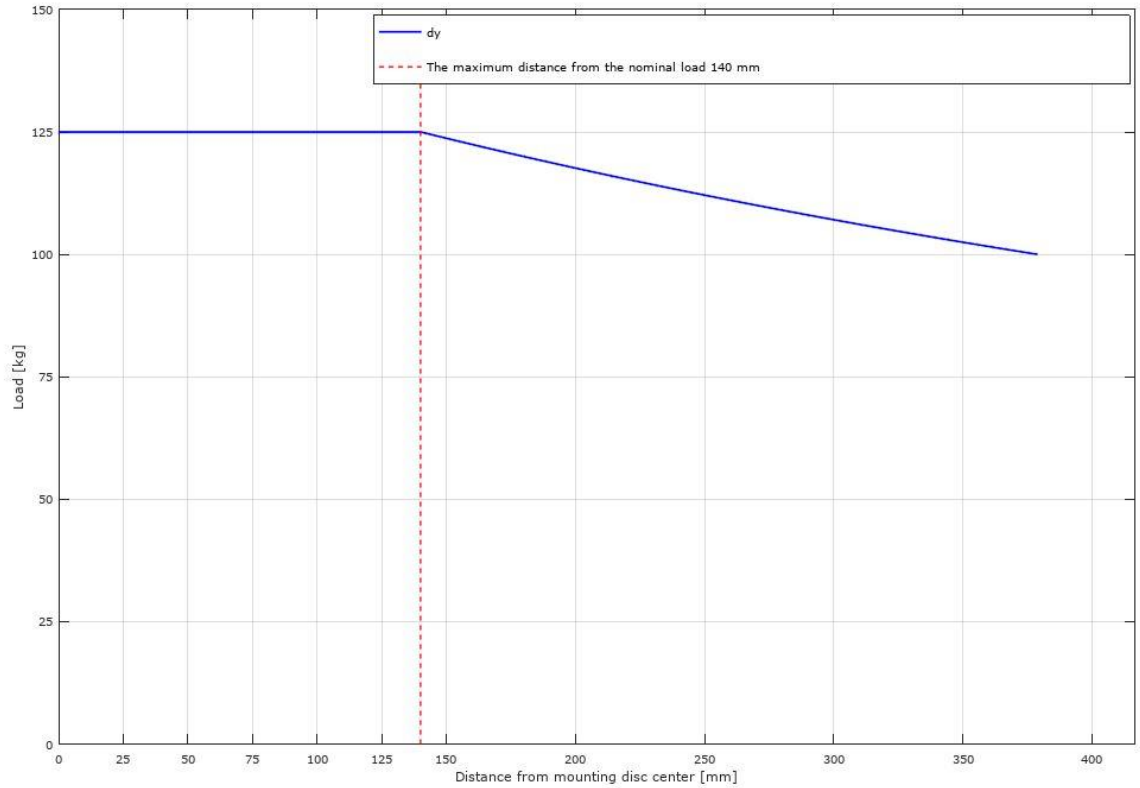

Fig. 4 Drive torque of the axis

Copyright © 2018 Kawasaki Robotics GmbH All rights reserved by Astor

5.3. Chart of the load relative from the distance from the plate

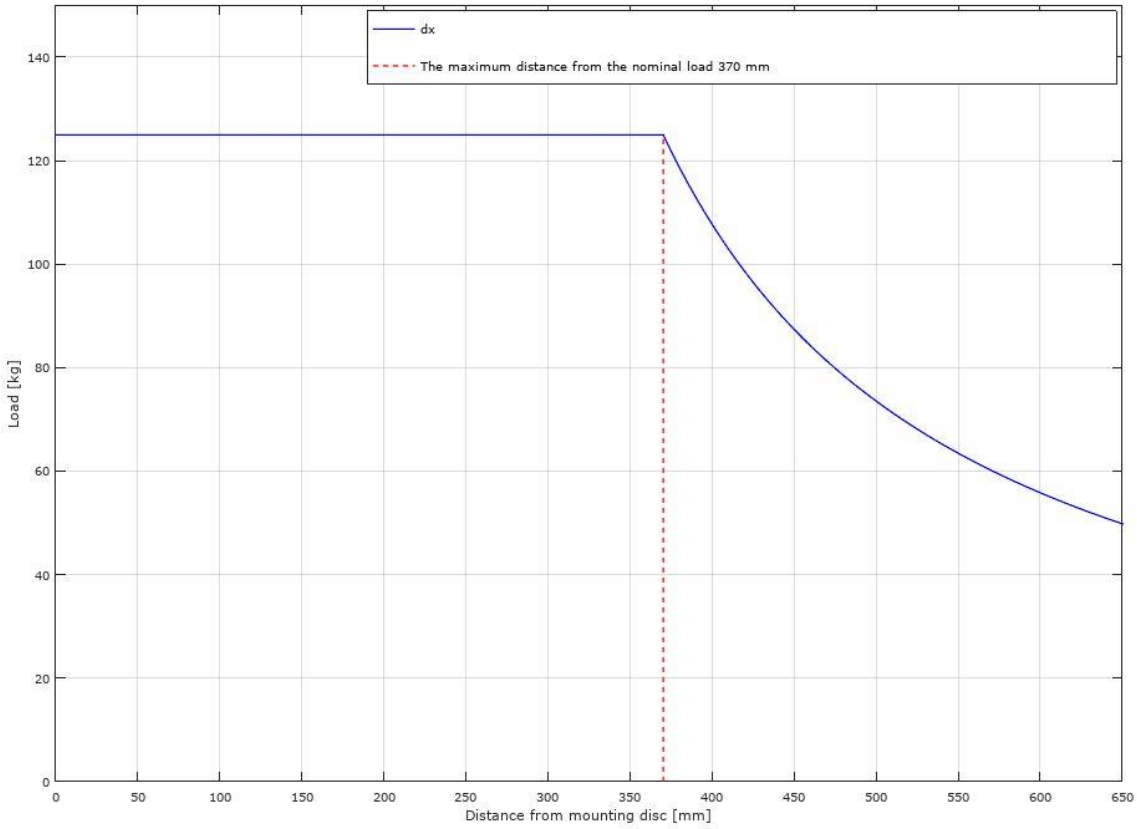

Fig. 5 Rigidity of the structure

Copyright © 2018 Kawasaki Robotics GmbH All rights reserved by Astor

6. Basic units of the positioner

6.1. Mechanical system

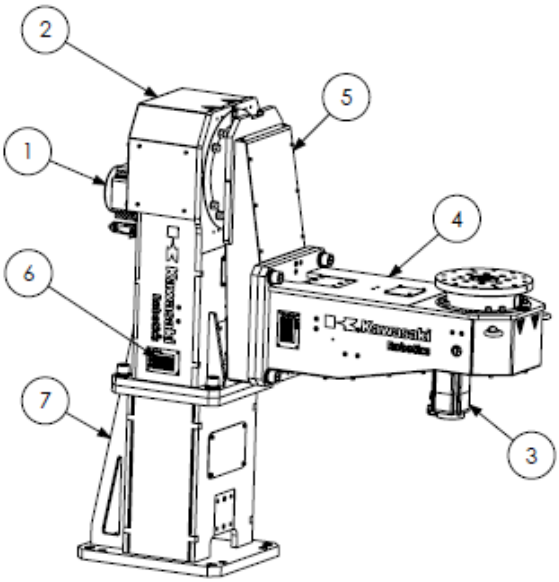

1. Servo Kawasaki 1.2 kW,
2. Basic module – PST250,
3. Servo Kawasaki 0.675 kW,
4. Basic module – PST125,
5. Mounting plate - connecting two modules into one device,
6. Rating plate,
7. Pedestal.

Fig.6 Basic units of the positioner

6.2. Electrical system

The power units consists of:

Axis 1 (plate tilt in the range of -180° ÷ 180°) Kawasaki servo motor 1.2 kW and cycloidal transmission.

Axis 2 (rotation of the plate -360 ° ÷ 360 °) Kawasaki servo motor 0.675 kW and cycloidal transmission.

The axes are controlled as external axes from the robot control system. It is not possible to move the positioner without connecting it to the KAWASAKI robot controller.

Standard length of electrical wires connecting the servo with the controller is 15 m, but usable length is 13m.

The ground is transferred to the rotating plate by means of a set of 2 copper blocks located below the bottom of the positioner gear.

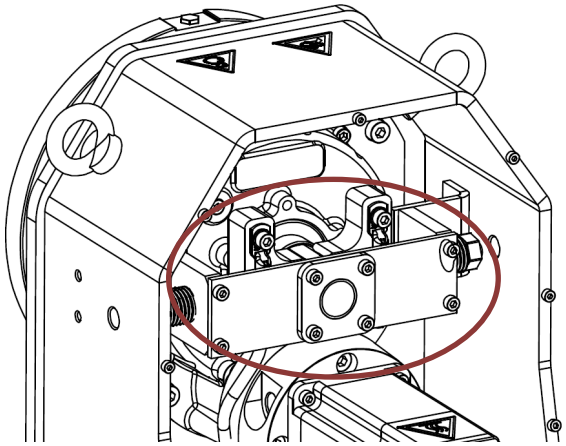

Fig. 7 Ground transfer of the PST125-L2 positioner

Copyright © 2018 Kawasaki Robotics GmbH All rights reserved by Astor

7. Assembly and start-up

7.1. Assembly

The PST125-L2 is assembled, connected, and pre-commissioned by the personnel appropriately prepared for this task. These persons are assigned by the manufacturer. These persons have the knowledge and skills required to safely and correctly assemble the machine. Connection to the mains must be carried out in accordance with the Polish Standards. It is not allowed to carry out the assembly independently; this will result in loss of warranty. During the warranty period, the user may not interfere in the electronic or mechanical components except as set forth in this maintenance documentation. Failure to comply with the above will result in loss of warranty.

The positioner must be leveled and fixed to the ground using foundation bolts, M20 bolts with a strength class of at least 10.9 or M20 x 260 chemical anchor bolting. The spacing of the mounting holes fixing the positioner to the slab is shown in Figure 1.

The positioning connector is used to properly install the positioner on the station, after fastening the positioner to the ground, the connector can be unscrewed.

In this case, place a steel slab of the thickness of at least 28 mm (thread length min. 25 mm); the slab size and the concrete class must withstand the transfer of the torque values given below.

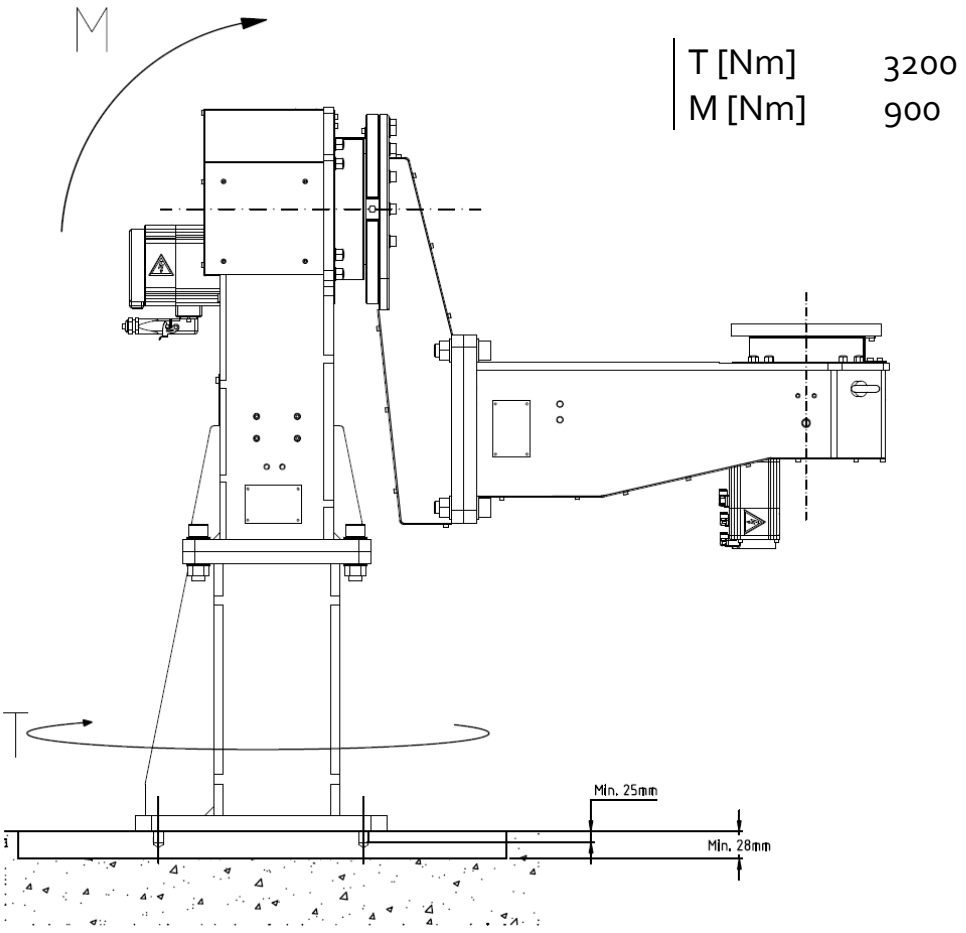

Fig. 8 Mounting the positioner directly on the floor - fixed slab

Copyright © 2018 Kawasaki Robotics GmbH All rights reserved by Astor

The second case assumes mounting the positioner on a steel slab anchored to the concrete with 6xM20 chemical anchor bolting. Spacing of the anchor holes for concrete – PCD650

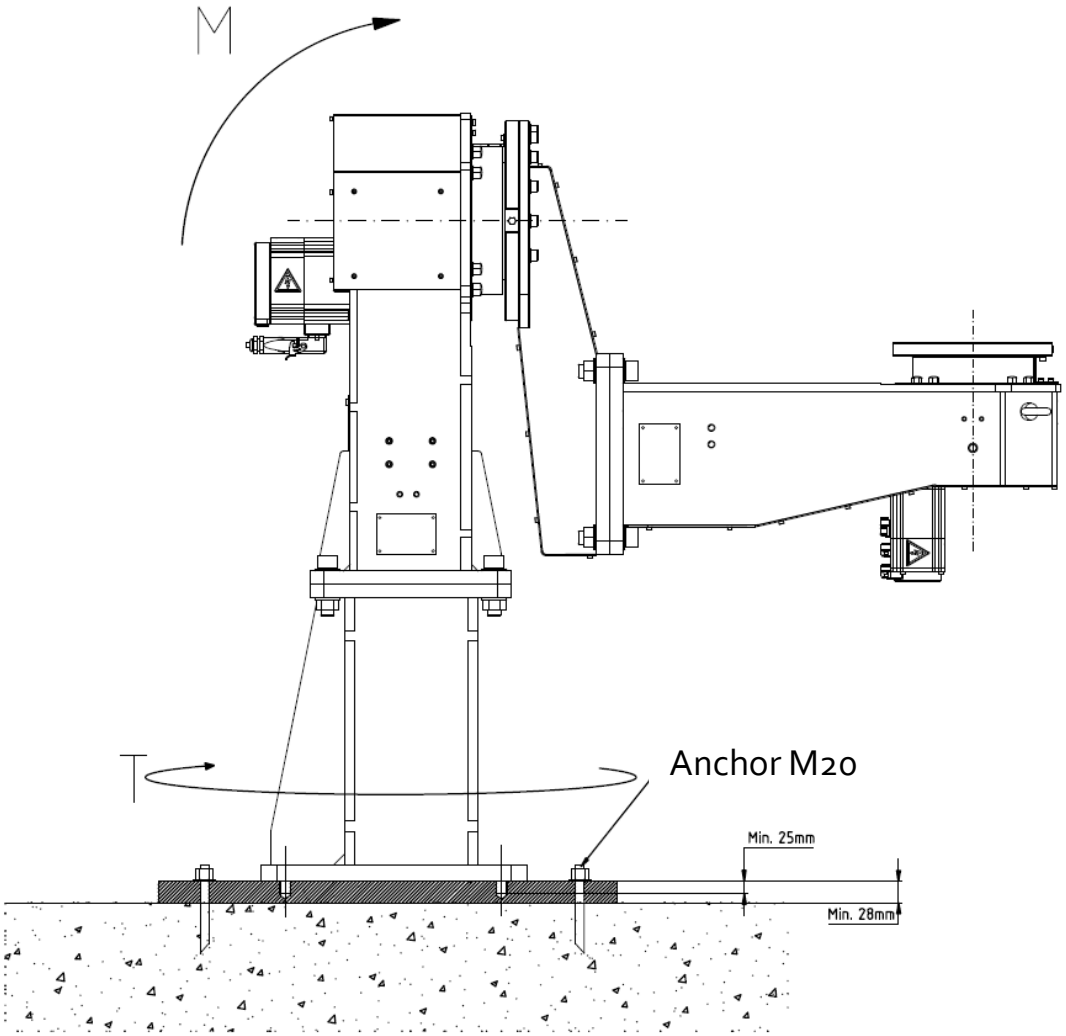

Fig. 9 Mounting the positioner directly on the floor - anchored slab

Copyright © 2018 Kawasaki Robotics GmbH All rights reserved by Astor

7.2. Getting ready for operation

After completing the installation work on the positioner:

- Perform all the tasks on connecting the robotic station;
- Set up the tool for the positioner;
- Place the part in the tool.

The definition of the external axis is described in the documentation of the External Axis (90210-1292DEC_External_Axis_Addition_Manual_(EOx-Series)).

7.3. Emergency Stop connection

Safety of the JT1 and JT2 axes is ensured by the robot safety circuits and the circuits must be prepared in accordance with Kawasaki technical documentation.
For proper safety of the JT1 and JT2 axes of the positioner, two PN_CMD and PN_ON signals must be connected to the robot inputs, the signals come from the safety curtain or the safety controller. The signals in a high state after the axes control group (GROUP) change, cause power cut to the servo which is located close to the operator.

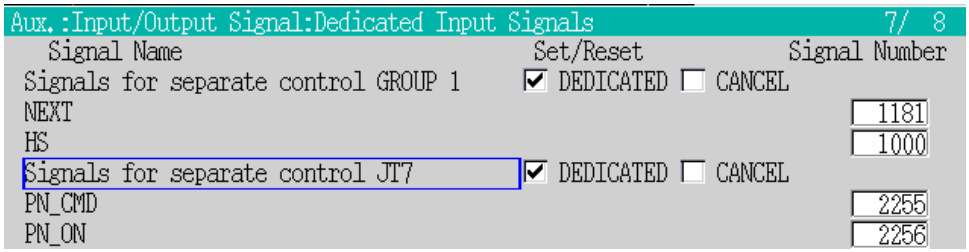

Fig. 10 Ancillary axis off signal declaration

CAUTION!

When the positioner is supplied, the PN_CMD and PN_ON signals are declared as internal signals. This should be changed when the positioner is integrated in the position.

7.3.1. Cubic-S Option

The Cubic-S option can further control the status of the Kawasaki exterior axis. In order to add the axis monitoring, declare axis 7, 8 or 9 as DEVICE 1, 2 or 3.

No.	Classification	Name	Unit	Value1	Value2	Value3	Value4	Value5	Value6	Value7	Value8	Value9
601	Stop Monitoring	Valid/Invalid in Teach Mode/Fast-forward Check	-	Valid								
32		Robot Joint Definition (1-9)	-	0	0	0	0	0	0	0	0	0
38		Device 1 Joint Definition (1-9)	-	0	0	0	0	0	0	0	0	0
39		Device 2 Joint Definition (1-9)	-	0	0	0	0	0	0	0	0	0
40		Device 3 Joint Definition (1-9)	-	0	0	0	0	0	0	0	0	0

Fig. 11 Stop Monitoring Declaration for ancillary axis in the Cubic-S option

Copyright © 2018 Kawasaki Robotics GmbH All rights reserved by Astor

The definition of the dedicated input for monitoring the status of the ancillary axis in CUBIC-S is described in **the documentation of the CUBIC-S option (90210-1272DED_Cubic-S_Instruction Manual (E series)).**

7.4. Start-up

To start the positioner, connect it to the robot control system.

Connect the 50979-0073L15 with the B marking to the B-JT8 ENGINE in the Kawasaki controller

Connect the 50979-3340L13 with the B marking to the B-JT8 SIGNAL in the Kawasaki controller

Connect the 50979-0073L15 with the C marking to the C-JT8 ENGINE in the Kawasaki controller

Connect the 50979-3340L13 with the C marking to the C-JT8 ENGINE in the Kawasaki controller

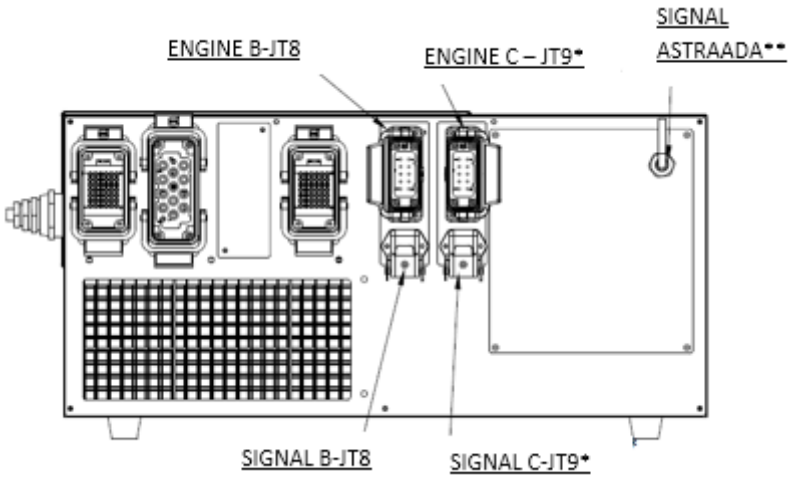

* - connecting the second ancillary axis wires - a station with two ancillary Kawasaki axes,

**-only when controlling additional indexing servomotors.

Starting up the biaxial positioner starts up the robotic station and follows the positioning algorithm.
To move the axis JT7 or JT8 (drives Kawasaki), you should choose the appropriate group. Press the "ALT" key on the TeachPendant off Monitors under (C) of the screen TP.JT7 or JT8.

Copyright © 2018 Kawasaki Robotics GmbH All rights reserved by Astor

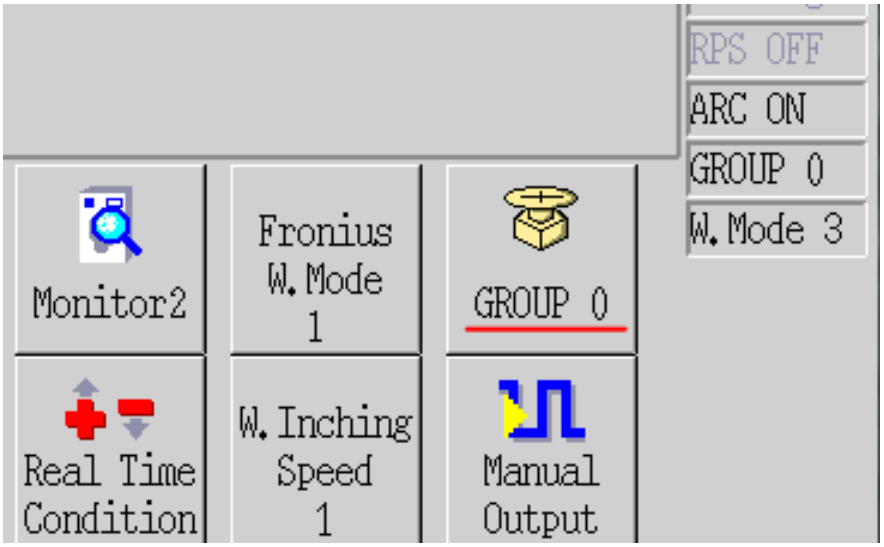

GROUP -1 – no possibility of moving additional axes,

GROUP 0 - the ability to move axes without cooperation,

GROUP 1 – moving the JT7 and JT8 axis in co-operative mode.

Fig. 12 Revision Steering Group axes

Starting the positioner is synonymous with starting the robotic station and follows the algorithm of the station's operation.

7.5. Working and safe use conditions

The PST125-L2 positioner is suitable for indoor use in the following environmental conditions:

- Air free from condensed stean, dust, corrosiver or explosive gases;
- Permissible ambient temperature: +5°C ÷ +40°C;
- Maximum temperature of the positioner's plate: 90°C.

When operating the positioner:

- Observe all the safety rules for safe work at a robotic station;
- Get acquainted with possible health or life hazards due to improper operation of the device;
- An employee handling the robotic station with the PST125-L2 positioner must be familiar with the contents of this Operation and Maintenance Manual and the Operation and Maintenance Manual for the industrial robot;
- It is not permitted to carry out maintenance work during the operation of the station
- It is forbidden to leave tools on the housing and servo drives of the positioner.

Detailed health and safety regulations should be developed by the user at the workplace. Observe general health and safety regulations for electrical and mechanical equipment when connecting, starting-up and operating the positioner.

It is not permitted for persons to be present in the operating area of the positioner during the work of the machine (within range of the tilt and working rotation position of the positioner including the tooling) as well as for unauthorized persons to carry out repairs and maintenance.

Copyright © 2018 Kawasaki Robotics GmbH All rights reserved by Astor

In addition, the operating crew must know how to attach the tools to the positioner plate and how to place the parts in this equipment.

Secure the robot in the positioner workstation area using fencing and light barriers in accordance with Polish safety standards.

7.6. Maintenance of the positioner

Maintenance procedures include measures aiming at reducing wear on parts and components of the mechanical system and ensuring correct positioner operation. Maintenance should be carried out by trained personnel. The service technician authorized to carry out repairs is the manufacturer or a person designated by the manufacturer. The warranty does not cover mechanical damage resulting from improper use of the station.

Before performing any maintenance work, make sure the equipment is disconnected from the mains

7.7. Maitenance schedule

Action \ Period of time	Daily inspection	Monthly inspection	2500 hours	5000 hours or 1 year
Physical damage	☑		☑	
Gear blacklash and abnormal sounds during operation	☑		☑	
* Complement to the copper paste on the shaft of the disc in the ground transfer system		☑	☑	
Replenish gear lubrication and bearings				
Check the positioner brakes			☑	
Refresh transmission lubricants			☑	
Check the internal wires of the positioner			☑	
Battery change			☑	
Check the welding mass clamps			☑	
** Replacement of welding mass clamps			☑	
Checking the tightening torque of the assembly screws			☑	
Technical review made by authorized service K-Positioners				☑

* instruction on performing the activity in item 7.8

** In case of excessive wear and tear.

Copyright © 2018 Kawasaki Robotics GmbH All rights reserved by Astor

7.8. Complement to the copper paste in the ground transfer system

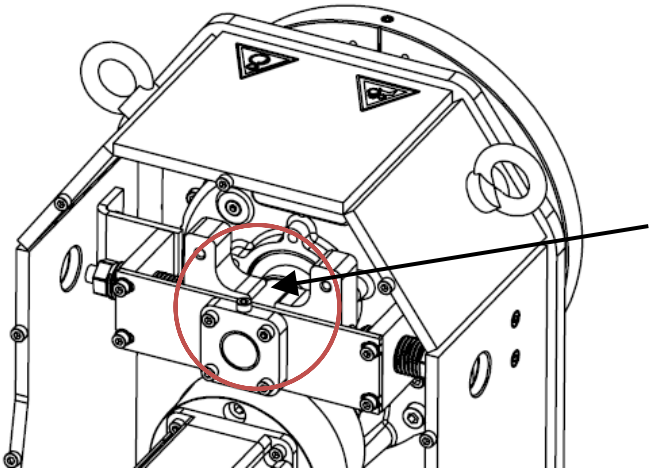

On the shaft of the disk, the copper paste in the ground transfer system should be supplemented

Fig. 13 Place of restoration of copper paste

The recommended measure is the grease or copper paste (WÜRTH CU 800), which as a means of seperating, protects the surface against seizing. In order to be completed, you must remove the back cover of keeping any precautions-the device must be disconnected from the power supply. Then clean the old grease length and apply a new one.
The action should be performed once a month.

7.9. Adjustment of the clamping force of the ground transferring system

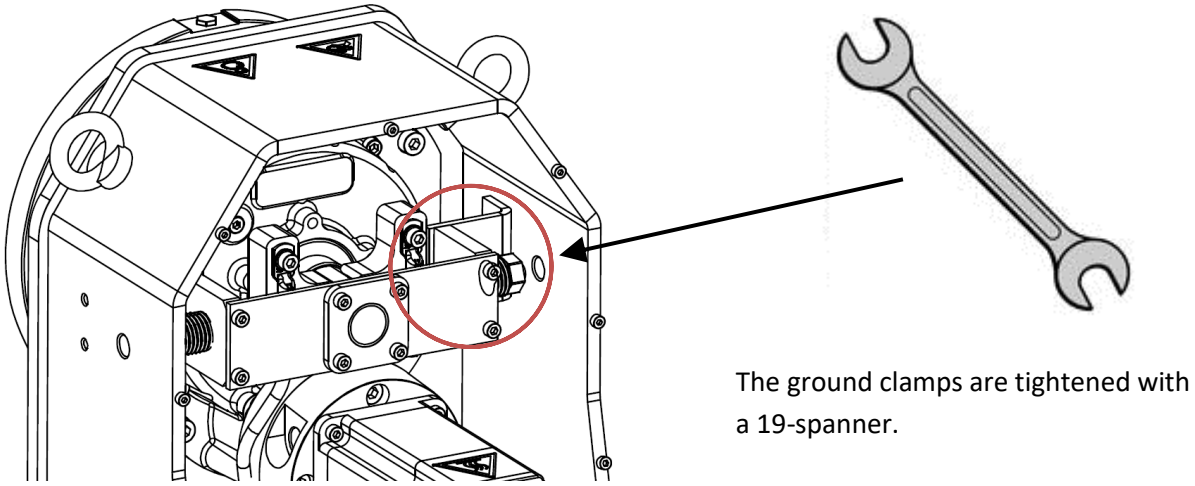

The ground clamps are tightened with a 19-spanner.

Fig. 14 Tightening place of the ground clamps

Copyright © 2018 Kawasaki Robotics GmbH All rights reserved by Astor

8. Lay of user cables inside the structure

The positioner allows laying the user wires through the open gear and the body of the device itself. The diameter of the passage opening is 22 mm. The flight of the first axis with a diameter of 36 mm is half occupied by the wires of the second axis of the positioner.

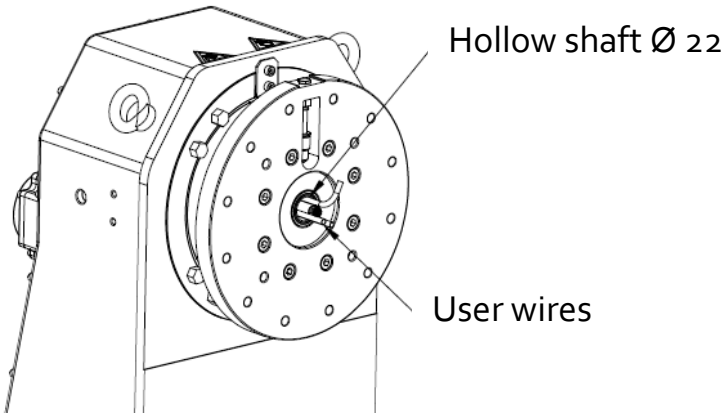

Fig. 15 Lay of wires inside the structure

Copyright © 2018 Kawasaki Robotics GmbH All rights reserved by Astor

9. Storage and transport conditions

9.1. Storage

The PST125-L2 biaxial positioner should be stored indoors, in rooms free from aggressive corrosive agents. Ambient temperature should range between + 5 ° C ÷ + 40 ° C and humidity should not exceed 80%. The positioner should also be protected against shocks and vibrations.

9.2. Transport

Transport of the positioner should be carried out by clean, dry and covered means of transport, protected against penetration of precipitation into the interior and against exceeding the temperatures of + 50 ° C and -25 ° C. At the same time the positioner must be protected against sliding.

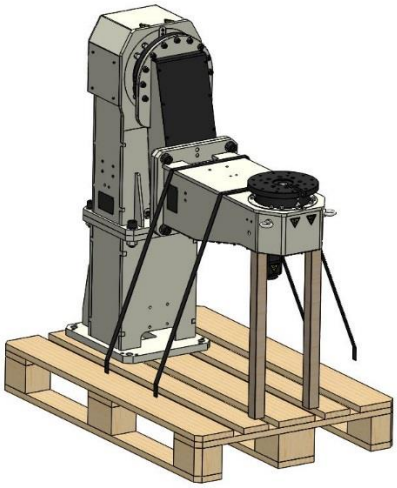

Fig. 16 The manner of transporting the positioner on a Euro pallet

Copyright © 2018 Kawasaki Robotics GmbH All rights reserved by Astor

10. Safety information and residual risk

The PST125-L2 has been designed and built for precise positioning of objects attached to it in two axes, depending on the used version of the device. It is a prerequisite for the safe use of the device described above that the maximum permissible load shown in this manual is not exceeded.

10.1. Danger due to mechanical construction:

10.1.1. Crushing and cut-offs

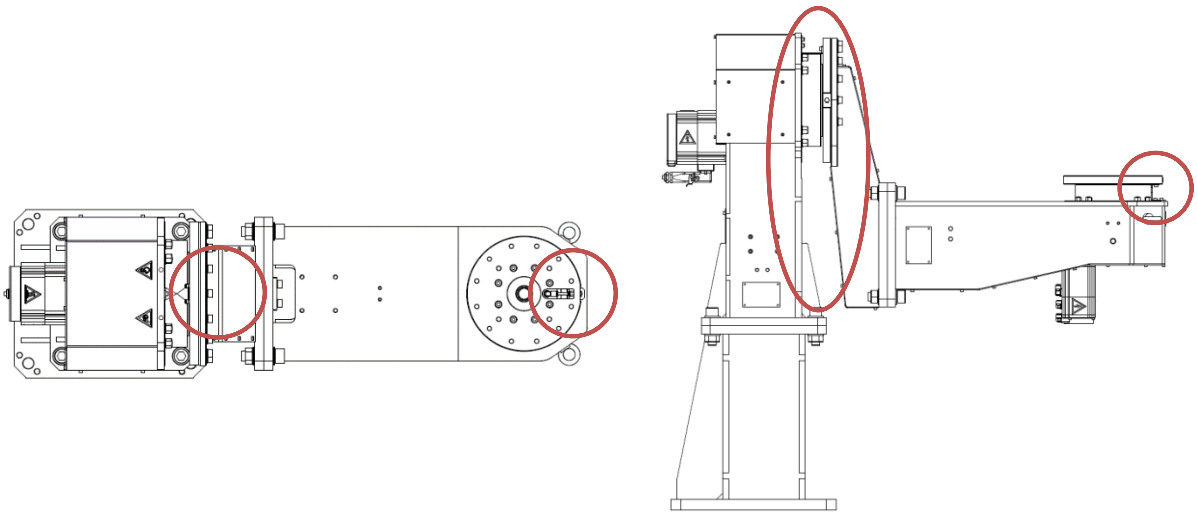

Fig. 17 Areas with the risk of crushing

There is a risk of crushing, cutting fingers or other parts of the body in the marked areas. Do not leave or put any tools or parts of the body or animals in these areas.

It is forbidden to stay in the work zone while the positioner is in operation.

10.2. Dangers due to the electrical system

After connecting the positioner to the mains, it is forbidden to connect and/or disconnect the wiring of the device; these actions may result in an electric shock.

11. Warranty conditions

Warranty covers only defects arising from causes inherent in the sold product. The manufacturer's warranty covers 12 months. The basic principle of the maintenance of warranty is to use a table with the timing of the steps preservatives (p. 14) and use the device as intended and technical parameters.

Copyright © 2018 Kawasaki Robotics GmbH All rights reserved by Astor

12. Notes

Copyright © 2018 Kawasaki Robotics GmbH All rights reserved by Astor

Appendix 1.

Parts of the positioner must be ordered from the ASTOR company. List of branches available at: http://www.astor.com.pl/kontakt.html. In order to improve order handling, please specify the positioner model and the part name along with the code.

Spare Parts List:

Name		Product code	Quantity [pcs.]
Servo drive Kawasaki 0.675 kW		50601-1461	1
Servo drive Kawasaki 1.2 kW		50601-1465	1
Cycloidal transmission JT2		PST-RDS-027C	1
Cycloidal transmission JT1		PST-RDS-050C	1
Mass transfer	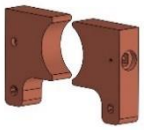	PST125-MASA	1
Body JT2	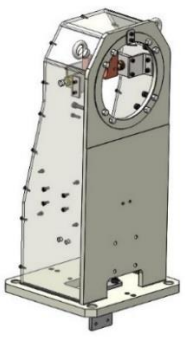	PST125-BODY	1

Copyright © 2018 Kawasaki Robotics GmbH All rights reserved by Astor

Plate of the positioner JT2		PST125-PLATE	1
Body JT1	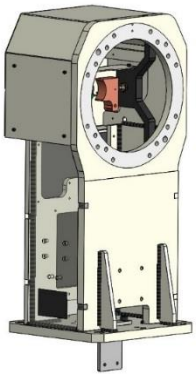	PST250-BODY	1
Mounting F2		PST-L2	1
Pedestal	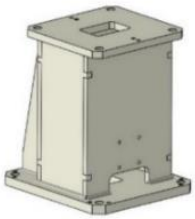	PST-SOCLE	1

Copyright © 2018 Kawasaki Robotics GmbH All rights reserved by Astor

13. Manufacturer's data

Astor Sp. z o.o.

Ul. Smoleńsk 29, 31-112 Kraków

Phone number: +48 (12) 428 63 00

Fax: +48 (12) 428 63 09

e-mail: info@astor.com.pl

NIP: 676 01 05 127

Copyright © 2018 Kawasaki Robotics GmbH All rights reserved by Astor

Kawasaki
Robotics

Kawasaki
Robotics